Corporate Armor For more information, please call **877.449.0458**, or email us at **Sales@CorporateArmor.com**.

AER3100 Series

All-in-One, Cloud-Managed Networking Solution

THANK YOU FOR CHOOSING CRADLEPOINT

Cradlepoint is the leading provider of secure, cloud-managed 3G/4G/LTE networking solutions for the distributed enterprise with hundreds or thousands of locations. Our broad family of high-performance routers are designed for deployment in mission-critical applications that require 24x7 connectivity.

Always Connected. Always Protected.

AER3100 Key Features:

- Cloud-managed
- Dual-band, dual-concurrent WiFi (802.11 a/b/g/n/ac)
- Dual-modem, multi-carrier support
- Ports: 1 GigE WAN / 12 GigE LAN (switchable)
- WWAN analytics
- Industry-leading 4G failover
- Unified Threat Management
- Software-defined radio (supports multiple carriers)
- Purpose-built for PCI Compliance 3.1

Go to cradlepoint.com/aer3100 to learn more.

©Cradlepoint. All Rights Reserved. | +1.855.813.3385 | cradlepoint.com

Corporate Armor For more information, please call **877.449.0458**, or email us at **Sales@CorporateArmor.com**.

WHAT'S INCLUDED:

Integrated MC400 3G/4G Modem

Modem & WiFi Antennas

54V 2.25A AC/DC Power Adapter

Ethernet Cable

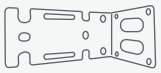

Rack Mounting Brackets

+ Rubber Feet for Desk Mount

HARDWARE

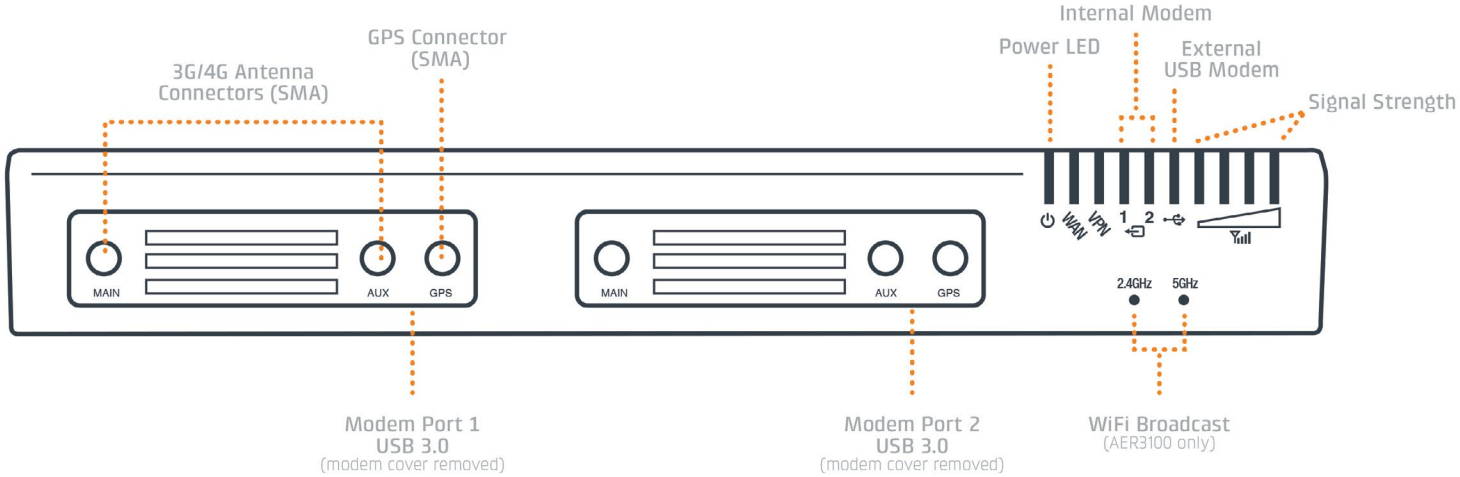

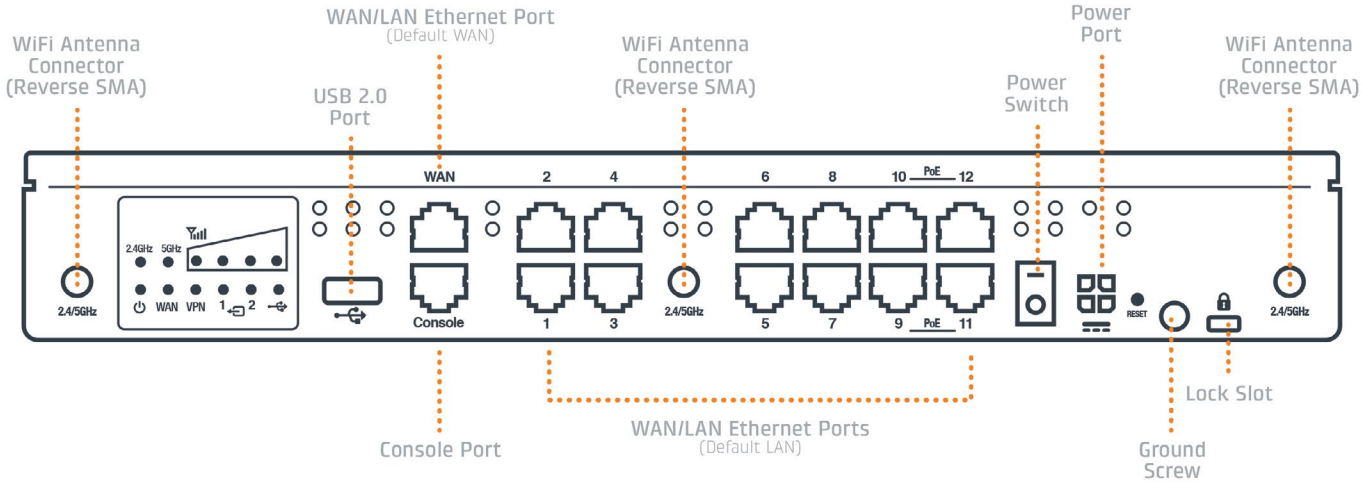

©Cradlepoint. All Rights Reserved. | +1.855.813.3385 | cradlepoint.com

Corporate Armor For more information, please call **877.449.0458**, or email us at **Sales@CorporateArmor.com**.

LED Indicators

Power: The Cradlepoint AER3100/AER3150 must be powered using an approved 54V DC power source.

- Green = Powered ON
- No Light = Not receiving power. Check the power switch and the power source connection.
- Amber = Attention. Open the administration pages (see page 4) and check the router status. The LED will show amber until the user changes the default Administrator and WiFi passwords. Default passwords must be changed to secure the router.

Ethernet WAN: Indicates information about a data source connected to the Ethernet WAN port.

- Blue = Connected to an active Ethernet WAN interface

VPN: Indicates information about a VPN data source.

- Green = Active VPN tunnel

WiFi Broadcast: (only on AER3100) These two LEDs indicate activity on the WiFi broadcast for both the 2.4 GHz and 5 GHz bands.

- 2.4GHz (green) = 2.4 GHz WiFi is on and operating normally.
- 5GHz (blue) = 5 GHz WiFi is on and operating normally.

Signal Strength: Blue LED bars indicate the active modem's signal strength.

- 4 Solid Bars = Strongest signal
- 1 Blinking Bar = Weakest signal. (A blinking bar indicates half of a bar.)

Internal Modem: Indicates the status of internal modems.

External USB Modem: Indicates the status of external USB modems. Both internal and external USB modems have the following LED indicators:

- Green = Modem has established an active connection.
- Blinking Green = Modem is connecting.
- Amber = Modem is not active.
- Blinking Amber = Data connection error. No modem connection possible.
- Blinking Red = Modem is in the process of resetting.

Additional LED Indications

- Several different LEDs blink when the factory reset button is detected.
- Two of the modem LEDs blink red in unison for 10 seconds when there is an error during a NetCloud OS (firmware) upgrade.

AER3100 MODEM DETAILS

Accessories:

- Additional MC400 4G LTE modem*
- Replacement power adapters and international power cords
- External modem antennas and cabling

Model Numbers:

AER3100	S4A525A
AER3150	S4A530A

*A Cradlepoint MC400 4G LTE modem comes standard with the AER3100/AER3150. Add a second integrated MC400 modem for a complete "Cut-the-Wire" 4G LTE solution, fusing enterprise reliability with unparalleled agility.

Enterprise Support

For enhanced services including enterprise-level support, extended warranties, site surveys, and expert installation, learn more about Cradlepoint's CradleCare suite of services at cradlepoint.com/cradlecare.

GETTING STARTED

Setting up the router

- Purchase a data plan. Insert the SIM as shown in the following step.
- Connect modem antennas (finger tight only).
- Plug the power supply into an electrical outlet.
- Ensure power is switched on. O = OFF I = ON

Corporate Armor For more information, please call **877.449.0458**, or email us at **Sales@CorporateArmor.com**.

Antennas

When connecting the provided antennas, review the connection points.

- WiFi antennas (only included on AER3100) have flat circular bases (RSMA).
- Modem antennas have protruding pins (SMA).

SIM Card Setup

A wireless broadband data plan must be added to your Cradlepoint AER3100/AER3150. Wireless broadband data plans are available from wireless carriers such as Verizon, AT&T, Sprint, EE, and Vodafone. The SIM must be provisioned with the carrier. Contact your carrier for details about selecting a data plan and about the process for provisioning your SIM.

Once you have an activated 2FF SIM, insert it into the integrated modem. Insert the SIM card into the slot marked SIM 1 (use the other slot, SIM 2, for a secondary/backup SIM). Be sure to insert the card with the notch-end first and the gold contacts facing down — it will click into place.

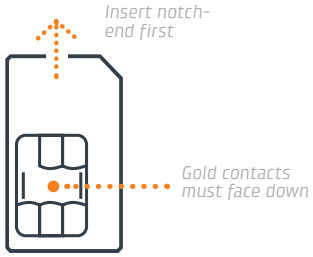

Attach the Internal Modem

Follow these steps to attach the internal modem:

1. On front of router, press two tabs on modem cover together and pull cover straight out. Remove Main, Aux, and GPS plugs.
2. Slide modem(s) into USB port(s).
3. Reattach the modem cover. If desired, use a Phillips screwdriver to secure modem door screws to bottom side of the router near the front.

cradlepoint NetCloud™

Deploy and Manage the Intelligent Network with Cradlepoint NetCloud

Cradlepoint NetCloud is a network management and application platform that integrates cloud-based, software-defined networking with your Cradlepoint devices to improve productivity, increase reliability, reduce costs.

NetCloud includes SD-WAN capabilities and SD-Perimeter to enhance the security and scalability of your network and business operations.

To learn more and begin a free 30-day trial:

cradlepoint.com/netcloud
Sales & Support: +1 855-813-3385

©Cradlepoint. All Rights Reserved. | +1.855.813.3385 | cradlepoint.com

Corporate Armor For more information, please call **877.449.0458**, or email us at **Sales@CorporateArmor.com**.

Activate Real-time Clock Battery

Pull the tab on bottom of router to activate the real-time clock battery.

Attach the WiFi* & Modem Antennas

Attach the three included WiFi antennas and two included modem antennas to the connectors. Antennas are jointed, which enables you to position them for optimal signal. To attach, hold the antenna straight and twist the base of the antenna to connect, folding the joint if needed.

Care should be taken to ensure that the router antennas are not near metal or other RF reflective surfaces. Do not mount router on a wall.

*AER3100 only

Connect the Power Source

Plug the provided power supply (54V DC wall adapter) into an electrical outlet. Then connect the power supply to the router. Ensure power is switched on.

When you set the power switch to the 'On' position, watch for the power LED to illuminate.

Access the Administration Pages

To make configuration changes to your router, open the AER3100's GUI-based administration pages.

1. Connect to the router via Ethernet or WiFi. For WiFi, the default SSID is found on the product label on the bottom of the router.

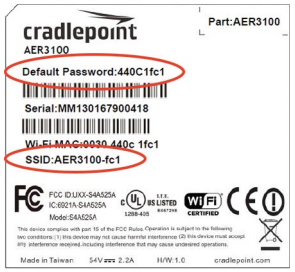

2. Open a browser window and type **"cp/"** or **"192.168.0.1"** in the address bar and press return/enter.
3. When prompted for the Administrator password, type the default eight character password found on the product.
4. Upon log in for the first time, you are automatically directed to the First Time Setup Wizard to configure Admin Password, Time Zone, WiFi Security, and WAN Failure Check.

FIRST TIME SETUP WIZARD

When you log in to the local administration pages for the first time, you will be automatically directed to the **First Time Setup Wizard**, which will walk you through basic steps to customize your Cradlepoint AER3100. You have the ability to configure any of the following:

- Administrator Password
- Time Zone
- WiFi Network Name*
- Security Mode
- Access Point Name (APN)
- Modem Authentication
- Failure Check

If you are currently using the router's WiFi network, you will need to reconnect your devices to the network using the newly established wireless network name and password.

To return to the First Time Setup Wizard after your initial login, select 'Getting Started' on the top navigation bar and First Time Setup in the drop-down menu.

To restore the router to its factory default settings, press and hold the RESET button on the side of the device for ten seconds. Reset returns the login password to the default password and resets all configuration changes.

*AER3100 only

©Cradlepoint. All Rights Reserved. | +1.855.813.3385 | cradlepoint.com

Corporate Armor For more information, please call 877.449.0458, or email us at Sales@CorporateArmor.com.

CONNECTING TO NETCLOUD MANAGER

Depending on your ordering process, your devices may have already been bulk-loaded into NetCloud Manager (NCM). Simply log in at cradlepointecm.com using your NCM credentials and begin managing your devices seamlessly from the cloud.

If your device has not yet been loaded into your NCM account, you need to register it. Log into the local administration pages (see page 5) and go to 'System > Setup Wizards > NCM Registration'. Enter your NCM username and password, and click 'Register'.

Once you are logged into cradlepointecm.com, begin managing your devices individually or by group. For example:

+ View the 'Dashboard' for a visual analytics overview of your devices, including a data usage chart.
+ Make a configuration change and apply it to all the devices in a 'Group'.
+ Set up email 'Alerts' for when a modem reaches its data cap threshold, for a configuration change, etc.

For more information about how to use Cradlepoint NetCloud Manager, see the following Knowledge Base articles:

+ knowledgebase.cradlepoint.com/articles/Support/Getting-Started-with-NetCloud-Manager
+ knowledgebase.cradlepoint.com/articles/Support/NetCloud-Manager-FAQ

UPDATING NETCLOUD OS

Cradlepoint regularly creates new NetCloud OS packages. You may need to update NetCloud OS to use the AER3100 with new modems and to access our latest features.

1. Log into the administration pages. You may have changed the Administrator Password when you used the First Time Setup Wizard.
2. Select 'System > System Control' on the left navigation bar, then 'System NetCloud OS' in the dropdown menu.
3. Find the 'NetCloud OS Upgrade' section. This displays the current NetCloud OS version that is installed and indicates if an updated NetCloud OS is available.
4. Click 'Automatic (Internet)' if a new version of NetCloud OS is available. The AER3100 will download and install the version and automatically reboot itself. A status monitor will appear and indicate when this process is complete. This process may take several minutes depending on your Internet connection speed.

If your device does not have an active Internet connection, you need to download the latest version from the Cradlepoint Connect Portal. Then use the 'Manual NetCloud OS Upload' option.

©Cradlepoint. All Rights Reserved. | +1.855.813.3385 | cradlepoint.com

Corporate Armor For more information, please call 877.449.0458, or email us at Sales@CorporateArmor.com.

SETTING THE APN

Depending on your modem, you may need to specify the APN (Access Point Name). Cradlepoint devices attempt to auto-detect the correct APN. In most cases, the APN will be correctly detected and your device will connect. If your device does not connect within approximately 5-10 minutes, follow the steps below to manually enter the APN.

Select the APN

1. Log into the administration pages (see page 4).
2. Select 'Connection Manager'.
3. Select the modem you would like to manage. Click 'Edit' to open the WAN Configuration editor.
4. Select the 'SIM/APN/AUTH Settings' tab. In the 'Access Point Configuration' field, select 'Default Override' and manually enter the desired APN.
5. Input the username and password for authentication if required by your carrier.
6. Click 'Submit'.

ROUTER COMMUNICATION / DATA USAGE

The factory default configuration of the router is set to communicate with Cradlepoint and other resources at regular intervals to access the latest NetCloud OS and modem updates, clock synchronization (NTP), and NetCloud Manager membership. Such communication may result in data usage and applicable charges regardless of whether the router uses a wired or wireless Internet connection. To avoid such data usage and potential charges, consult the following Knowledge Base article:

http://knowledgebase.cradlepoint.com/articles/support/router-communication-data-usage

©Cradlepoint. All Rights Reserved. | +1.855.813.3385 | cradlepoint.com