Corporate Armor For more information, please call **877.449.0458**, or email us at **Sales@CorporateArmor.com**.

cradlepoint

COR IBR900 Series

Cloud-Managed Networking for Vehicles

WHAT'S INCLUDED:

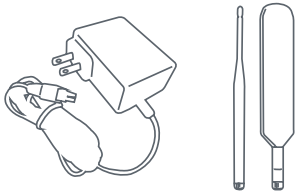

AC Power Adapter & Modem/WiFi Antennas
(on applicable models)

OR

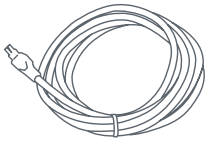

GPIO/Power Cable
(on applicable models)

Spare SIM Door Screws

THANK YOU FOR CHOOSING CRADLEPOINT

Cradlepoint is the leading provider of secure, cloud-managed LTE networking solutions for distributed and mobile enterprises with hundreds or thousands of locations or vehicles. The COR IBR900 is a compact, ruggedized 3G/4G/LTE router for advanced in-vehicle connectivity.

Everywhere you connect, we give you an Edge. Connect More. Wire Less.

COR IBR900 Key Features:

- Cloud-managed
- Dual-band, dual-concurrent WiFi
- Ignition sensing
- 9-33 DC voltage input range
- Active GPS support
- SIM-based auto-carrier selection
- Dual-SIM
- Fully ruggedized metal housing
- Integrated LTE Advanced Cat 6 LTE/HSPA+ modem
- Two gigabit Ethernet ports (LAN/LAN or WAN/LAN)
- Integrated mounting
- COR Extensibility Dock compatible

Go to cradlepoint.com/ibr900 to learn more.

©Cradlepoint. All Rights Reserved. | +1.855.813.3385 | cradlepoint.com

Corporate Armor For more information, please call **877.449.0458**, or email us at **Sales@CorporateArmor.com**.

Device Details

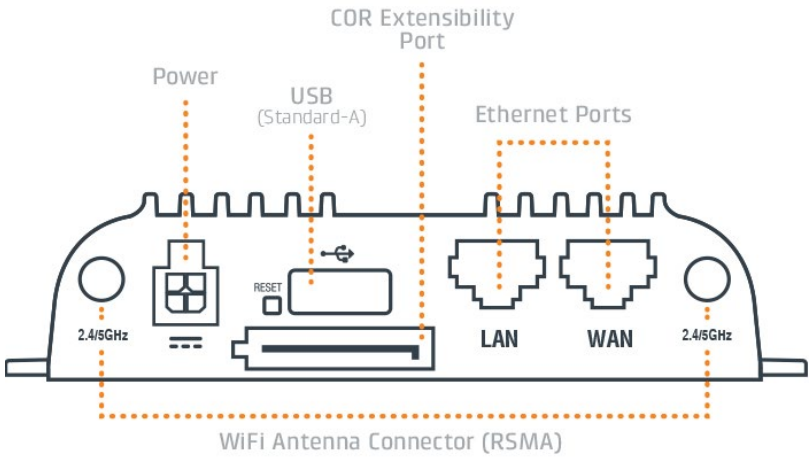

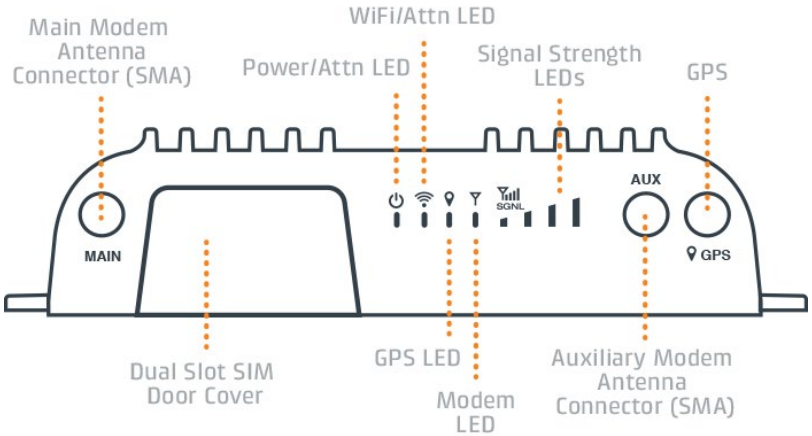

Model / Regulatory Numbers:

IBR900LP5	S5A701A
IBR950LP5	S5A706A
IBR900LP6	S5A643A
IBR950LP6	S5A648A
IBR950NM	S5A644A
IBR900LPE	S5A715A
IBR900-600M	S5A749A
IBR950-600M	S5A754A

Getting Started

Setting Up the Router

- Purchase a data plan. Insert the SIM as shown in the following step.
- Connect WiFi, modem, and GPS antennas as desired (finger tight only).
- Connect to power (9-33 VDC input range).

SIM Card Setup

To insert or remove a SIM card:

1. Remove the SIM door screws and cover.
2. Insert the SIM card with the metal contacts down and notch in. It will click into place. Depress again to remove.
3. Replace the SIM cover (extra screws included). The modem will not power on without the cover in place.

©Cradlepoint. All Rights Reserved. | +1.855.813.3385 | cradlepoint.com

Corporate Armor For more information, please call **877.449.0458**, or email us at **Sales@CorporateArmor.com**.

Deploy & Manage Your Device with NetCloud Manager

Your new device includes a subscription to NetCloud Manager (NCM), which allows you to configure and manage your new device remotely.

NetCloud Manager is a network management application that helps businesses deploy, configure, and collect actionable intelligence for any registered device. It also includes SD-WAN capabilities, like policy and orchestration, to enhance the security and scalability of your network and business operations.

Explore everything you can do with NetCloud Manager.
Visit cradlepoint.com/netcloud-manager or call us at: +1 855-813-3385

Accessing NetCloud Manager

Wait for the device to connect to a network (WAN) through the SIM or through WiFi-as-WAN.

To configure and manage your device via the cloud, log into NetCloud Manager. Open a browser to cradlepointecm.com and log in with the NetCloud Manager credentials received by email with your account information. Navigate to "Devices > Routers" to configure the router. To create, modify, and manage the router in a group, go to "Groups > Router Groups."

If the device does not establish a cellular connection within 60 seconds or will utilize WiFi-as-WAN, you may need to make configuration changes via the local UI for NetCloud OS. If needed, follow the instructions in the next section to log into NetCloud OS.

Logging into NetCloud OS

1. Connect to the router via Ethernet or WiFi.
2. Open the browser, type "cp/" or "192.168.0.1" and press enter.
3. Enter the eight-digit Administrator password found on the product label.
4. Upon first-time login, you'll automatically be directed to the First Time Setup Wizard.

Note: The power/attention LED will show amber until the user changes the default Administrator and WiFi passwords. Default passwords must be changed to secure the router.

Updating NetCloud OS

Cradlepoint regularly updates and enhances NetCloud OS. You may need to update NetCloud OS to use the IBR900 with new modems and to access our latest features.

1. Log in at cradlepointecm.com using your NetCloud Manager credentials.
2. Navigate to the "Groups" page.
3. Select a group and click on the NetCloud OS option in the top toolbar. In the dropdown menu that opens, select the desired version. Wait for NetCloud OS to load.

Corporate Armor For more information, please call 877.449.0458, or email us at Sales@CorporateArmor.com.

Activate Your Modem

A Cradlepoint router requires a SIM with an active data subscription to a wireless broadband data plan to connect to a wireless network. SIMs with wireless broadband data plans are available from wireless carriers such as AT&T, Verizon, Sprint, T-Mobile, EE, and Vodafone. Carriers offer several different types of data plans and Cradlepoint works with most (Mobile broadband, M2M, and router pricing plans; private and public APNS; and static or dynamic IP address).

For more information on activation see cradlepoint.com/activation.

GPS

The IBR900 comes with an active GPS connection at 3.3 V and 100 mA max and supports TAIP and NMEA protocols. For full functionality you will need to use an active GPS antenna.

Router Communication / Data Usage

The factory default configuration of the router is set to communicate with Cradlepoint and other resources at regular intervals to access the latest NetCloud OS and modem updates, clock synchronization (NTP), and NetCloud Manager membership. Such communication may result in data usage and applicable charges regardless of whether the router uses a wired or wireless Internet connection. To avoid such data usage and potential charges, consult the following Knowledge Base article:

http://knowledgebase.cradlepoint.com/articles/support/router-communication-data-usage

©Cradlepoint. All Rights Reserved. | +1.855.813.3385 | cradlepoint.com